DISCONTINUOUS FLOCCULANT PREPARATION STATION: AS–PROCHEM D

DESIGN, INSTALLATION DOCUMENTS & OPERATION MANUAL

Asio tech
čištění a úprava vod

DISCONTINUOUS FLOCCULANT PREPARATION STATION: AS–PROCHEM D

DESIGN, INSTALLATION DOCUMENTS AND OPERATION MANUAL

Valid from: 1st July 2019

Phone: 548 428 111
http://www.asio.cz
e-mail: asio@asio.cz

ASIO TECH, spol. s r.o.
Kšírova 552/45
619 00 Brno

TABLE OF CONTENTS

1. INTRODUCTION 6

1.1 DOCUMENT MODIFICATIONS 6

2. SAFETY 7

2.1 REQUIREMENTS OF PERSONAL PROFESSIONAL COMPETENCE 7
2.1.1 General 7
2.2 EQUIPMENT INSTALLATION AND PUTTING INTO SERVICE 7
2.2.1 Operators 8
2.2.2 Servicing and maintenance 8
2.3 PERSONAL PROTECTIVE EQUIPMENT 9
2.4 PROTECTION AGAINST POTENTIAL HAZARD / RESIDUAL RISKS 9
2.4.1 General 9
2.4.2 Weight and dimensions 9
2.4.3 Access to moving parts 9
2.4.4 Process chemicals 10
2.4.5 Other hazards 10
2.5 UNAUTHORISED USE 10

3. TECHNICAL DESCRIPTION 11

3.1 GENERAL 11
3.2 APPLICATIONS 11
3.3 STRUCTURAL DIMENSIONING OF THE FLOCCULANT PREPARATION STATIONS, THEIR SETTING AND SETTING AND FIXING INSTRUCTIONS 11
3.4 BASIC TECHNICAL PARAMETERS 12
3.5 MARKING 13
3.6 ELECTRICAL INSTALLATIONS 14
3.7 OTHER (NON-ELECTRICAL) ELEMENTS 14
3.8 DESCRIPTION OF BASIC PARTS AND THEIR CONNECTIONS 15

4. HANDLING, TRANSPORT AND STORAGE 16

4.1 HANDLING 16
4.2 TRANSPORT AND STORAGE 17

5. INSTALLATION 18

5.1 GENERAL INSTRUCTIONS FOR INSTALLATION (SETTING) 18
5.2 GENERAL PROCEDURES OF THE INSTALLATION OF THE FLOCCULANT PREPARATION STATION 18
5.3 FIXING AND INSTALLATION PROCEDURES 18
5.4 TABLE OF CONNECTIONS 19
5.5 ELECTRICAL INSTALLATIONS 19
5.5.1 General 19
5.5.2 Electrical parts 19
5.5.3 Conductor types and cross-sections 19
5.5.4 Electrical panel 20
5.5.5 Emergency stop 20

6. HANDING OVER TO THE CUSTOMER 21

7. COMMISSIONG OF THE EQUIPMENT 21

7.1 GENERAL 21
7.2 CHECKS BEFORE STARTING THE EQUIPMENT UP 21
7.3 FIRST START-UP AND CHECKS OF DRIVES 22
7.3.1 Checking of stirrer wiring 22
7.4 AUTOMATED OPERATIONS 22

8. OPERATION 23

8.1 GENERAL 23
8.2 OPERATIONAL CHECKS 23
8.3 EMERGENCY STOP 23
8.4 SHUTDOWNS 23
8.4.1 Short-time shutdowns 23
8.4.2 Shutdowns longer than one week 23

9. MAINTENANCE 24

9.1 GENERAL 24
9.2 SCOPE OF THE MAINTENANCE 24
9.3 MAINTENANCE PROCEDURES 24
General 24
Overall check 25
Checking of stirrer correct function 25
Checking of correct functions and cleaning of the level gauges 25
Checking of correct function of the wetting device 25
Checking of correct functions of the hand-operated valves 25
Complete cleaning of the equipment 25
Checking the electrical parts 25

10. SERVICE 26

Media volume in liters for specific active volume: 27

ANNEX 1 - CATALOGUE LIST AS-PROCHEM D 28

These documents are intended as general instructions for design and installation works of discontinuous flocculant preparation stations supplied by ASIO TECH, spol. s r.o. The documents also contain important instructions, information and safety warnings as regards the use, setting, and installation of these stations.

1. INTRODUCTION

These documents are intended as general instructions for design and installation works of the **discontinuous flocculant preparation stations**, type **AS-PROCHEM D**. The documents contain important instructions, information and safety warnings as regards the use, setting, and installation of the stations.

These documents are particularly intended for persons:

- performing the tasks of designing and constructing the product (equipment),
- transporting the product (equipment), and
- installing and setting the product (equipment) on site.

In all cases, it is assumed that the relevant persons are holders of necessary professional qualifications, i.e. they are persons duly authorised for carrying out of such activities.

The documents contain important instructions, information, and safety warnings.

Please, read the instruction thoroughly before you start with the design, installation, or any handling with the flocculant preparation station and in case of any doubts or uncertainties contact ASIO TECH, spol. s r.o.

Very important instructions and notices are indicated in the text graphically as follows:

Any non-compliance with the instructions marked by this symbol may be hazardous to human health or property

Forbidden activities

Any non-compliance with these instructions may result in damaged equipment of the plant

Other important instructions

1.1 Document modifications

Any modifications in this document may be performed only by ASIO TECH, spol. s r.o. or after its prior written approval.

2. SAFETY

2.1 Requirements of personal professional competence

2.1.1 General

In order to provide for adequate safety of persons as well as trouble-free operations of the equipment, the individual activities connected with the equipment use must be carried out only by persons who hold adequate professional qualifications.

In order to provide for adequate safety, the operating organization must ensure that the relevant individual activities are carried out by professionally competent persons only.

The operating organization must unambiguously appoint a person(s) responsible for the equipment attendance (hereinafter referred to as the "operators").

The operating organization must clearly appoint a person responsible for the equipment operations.

Any interventions into the equipment electrical parts may be performed only by professionally competent electricians.

Do not smoke, eat, and drink during all activities connected with handling, maintenance and/or servicing the equipment.

2.2 Equipment installation and putting into service

The procedures of the equipment installation and putting into service described in Sections 4 and 5 of this Manual may be performed only by persons meeting the following requirements:

- they are both mentally and physically competent for the described activities,
- they are familiar with this Manual,
- they are familiar with the current general and local operating & safety rules,
- they posses adequate professional qualifications, knowledge and experience for maintenance and repairs of electrical parts of machinery and equipment,
- in the case of interventions into the equipment electrical parts, they hold adequate professional qualifications, knowledge and experience for maintenance and repairs of electrical parts of machinery and equipment,
- they hold adequate professional qualifications, knowledge and experience for operations of process equipment for wastewater treatment, and
- they are authorised by ASIO TECH, spol. s r.o. for the installation and/or putting this equipment into service.

The equipment installation and putting into service is carried out by ASIO TECH, spol. s r.o. or the person(s) (company) trained and authorised by ASIO TECH, spol. s r.o.

2.2.1 Operators

In the scope described in Section 7 of this Manual, the equipment may be attended only by persons meeting the following requirements:

- they are both mentally and physically competent for the described activities,
- they are familiar with this Manual,
- they are familiar with the current general, locally valid operating & safety rules, and
- they have been appointed by the operating organisation for such activities.

2.2.2 Servicing and maintenance

Servicing, maintenance and removal of defects may be carried out only by persons meeting the following requirements:

- they are fully mentally and physically competent for the described activities,
- they are familiar with this Manual,
- they are familiar with the current general and local operating & safety rules,
- they have been appointed by the operating organisation for such activities,
- they hold adequate professional qualifications, knowledge and experience for maintenance and repairs of machinery and equipment, and
- in the case of interventions into the equipment electrical parts, they hold adequate professional qualifications, knowledge, and experience for maintenance and repairs of electrical parts of machinery and equipment.

Servicing and removal of defects in the equipment may be carried out only in the scope described in this Manual. Any servicing over and above this Manual is carried out by ASIO TECH, spol. s r.o. or the person(s) (company) trained and authorised by ASIO TECH, spol. s r.o.

Principles of safe use

Carry out only such activities, to which you are authorised.

In the connection with this equipment, only activities resulting out of this Manual may be performed.

While the equipment is in use, all current general and local operating & safety rules must be observed.

Proceed only according to the generally valid & safety-at-work procedures.

Strictly follow the protective measures preventing the hazards described in this

Manual, particularly in its Section 2.4.

Do not use the equipment, if the specified verification inspections and safety element tests are not carried out within the stipulated intervals.

Always use the approved personal protective equipment.

Get familiar with the placement and proper use of the emergency-stop elements.

Never make any interventions into the equipment electrical parts and do not open the panelboard, unless this is your work duty and you are properly qualified to do this.

Any emergency event must be reported to your superior and recorded into the Operating Log, if kept at the wastewater treatment plant.

2.3 Personal protective equipment

The use of personal protective equipment must be stipulated by the operating organization through in-house safety instructions. The expected scope of the use of personal protective equipment is shown in the table below:

Hazard	Protected part	Protection equipment
Chemicals	body, limbs	industrial protective clothing, rubber boots
	palms, fingers	rubber gloves
	head, face	head-piece, protective goggles or face shield
	respiratory system	breathing mask

2.4 Protection against potential hazard / residual risks

2.4.1 General

Although the equipment has been designed in accordance with the current safety codes, legal regulations and good technical procedures, it has not been possible to exclude the below specified hazards resulting out of the equipment nature and purposes of its use.

2.4.2 Weight and dimensions

If, before or after its installation, the equipment is handled incorrectly, there will be a danger of personal injury caused by falling or overturning of the equipment. The equipment handling instruction described in Section 4 herein must be strictly observed.

NEVER use any other way of handling, than that described in Section 4.1 herein.

2.4.3 Access to moving parts

In the course of maintenance procedures, there is a danger of contact with moving parts of the stirrer.

	If the protective covers are removed because of maintenance procedures, PAY A SPECIAL ATTENTION TO YOUR SAFETY! ***While handling or servicing the stirrer or if any person is nearby the stirrer, the stirrer must be disconnected from its power supply!***

2.4.4 Process chemicals

Albeit non-toxic, the flocculant can be removed from all material surfaces only with difficulties and therefore it is necessary to use consistently your personal protective equipment while handling this agent.

If in contact with skin, wash the affected place with warm water. If in eyes, rinse continuously with plenty of clean water.

	The operators must be acquainted with the instructions set out in the relevant safety data sheets of the used process chemicals. Always keep these documents at hand - at your workplace or storage of the relevant chemicals, as applicable.

After the work end, wash your hands thoroughly at least with warm water and soap. Keep your working clothes at a suitable place and discard the disposable gloves to the container purported for such type of waste.

	In all activities connected with handling the chemicals and immediately after their end, do not eat, drink, or smoke. After the work end, wash your hands thoroughly at least with warm water and soap.
	Be careful not to contaminate the floor with the flocculant emulsion and/or its diluted solution. Slippery surface may be formed resulting in slip, trip and fall hazards. If the chemicals and/or their solutions are swallowed (inhaled), proceed according to the instructions set out in the relevant safety data sheets. ***Store the chemicals only at places approved to this purpose.*** ***Strictly follow the current general and local instructions for handling of chemicals.***

2.4.5 Other hazards

Other hazards and protection against them are specified in other parts of this Manual as necessary.

2.5 Unauthorised use

It is strictly forbidden to use the equipment for any other purpose and in any other way than specified in this Manual.

3. TECHNICAL DESCRIPTION

3.1 General

The AS-PROCHEM D flocculant stations (hereinafter referred to as the "stations") are intended for discontinuous preparations of flocculant solutions and their subsequent dosing. The stations are constructed as cylindrical tanks by welding of various structural elements and sheets made of polypropylene (or its copolymers) expanded with blowing agents or extruded sheets.

3.2 Applications

The equipment is designed for discontinuous operations and flocculant mixture preparations and dosing of the mixture to the process:

- Chemical pretreatment (in front of separation step)
- Sludge dewatering

For flocculant solution preparation, pour powder or liquid flocculant slowly in the wetting device, together with tap water (open the manual valve). When there is ca. 30% of solution (vol.) in the tank, turn on the shaft mixer.

The station type range is designed according to the necessary volumes of the flocculant solutions (ANNEX 1 - CATALOGUE list AS-Prochem D).

The tanks cannot be used for storage of flammable liquids or liquids containing oxidizing agents (such as concentrated nitric acid, halogens, etc.).

The station is designed for storage of water or flocculant solutions.

If the station is filled with another liquid, it may be damaged!

3.3 Structural dimensioning of the flocculant preparation stations, their setting and setting and fixing instructions

Individual types of the station range used for the flocculant preparation do not differ in their design as regards the permissible setting conditions, structural dimensioning, ceiling structures, etc.

As regard the layout, the tanks are **aboveground structures**, i.e. intended for their installations above the ground.

As regards the structural dimensioning, they are **freestanding (self-supporting) structures** and there is no need to secure them structurally after their installation on the site.

Detailed information valid for individual stations is shown in the Catalogue Sheet forming Annex 1.

3.4 Basic technical parameters

The basic technical parameters of the standard flocculant stations are listed in the Catalogue Sheets that form Annex 1.

In addition and according to the relevant types, the flocculant preparation tanks may be equipped with process openings for connections of water inlet pipes, penetrations for electrical wiring (level gauge), pump intake pipes, etc. (see Section 5.4).

The flocculant preparation tanks may be also manufactured in non-standard (custom) dimensions subject to a special order.

3.5 Marking

AS-PROCHEM D 033.xxx/yy

Marking specifying the station type

Marking specifying the station nominal size

xxx = 050; 075; 100; 125; 150

Marking of station with automatic hopper version

yy = DK

For instance:

AS-PROCHEM D 033.125 – is rounded discontinuous flocculant preparation station of the 1.25 nominal size

Capacity of each station is described in Chapter 10.

The flocculant preparation stations are fitted with the manufacturer's plates containing the following data:

3.6 Electrical installations

A slow-speed stirrer is placed on the ceiling slab of the tank of flocculant preparation station; the stirrer is driven by a motor with the following specifications according to the station type:

Stirrer		AS-PROCHEM D 0.5	AS-PROCHEM D 0.75	AS-PROCHEM D 1.0	AS-PROCHEM D 1.25	AS-PROCHEM D 1.5
Absorbed power	*kW*	0.25	0.25	0.25	0.25	0.37
Current	*V*	400	400	400	400	400
Proud	*A*	0.84	0.84	0.84	0.84	1.05

3.7 Other (non-electrical) elements

The equipment is provided with a minimal water level sensor so that the minimum flocculant solution level is detected and the operations of the stirrer drive and the pump are protected (optional equipment) against the “dry” run.

List of equipment for non-electrical variables (same for all flocculant station types)			
Setting	**Controlled equipment**	**Measured variable**	**Equipment**
Limiting, min. level	Stirrer	Switch-off (blocking) solution level in the flocculant station	Submerged probe
Limiting, min. level	Dosing pump (optional)	Switch-off (blocking) solution level in the flocculant station	Submerged probe

3.8 Description of basic parts and their connections

4. HANDLING, TRANSPORT AND STORAGE

4.1 Handling

While handling the station, it is necessary to pay a special attention to the parameters of plastic materials (especially their lower resistance against impacts).

At temperatures under 5^{0}C, any handling with the station plastic tanks is forbidden!

Before handling the station, it is necessary to check the station overall conditions and pay a special attention to fastening points (if the station is fitted with them). It is also necessary to make sure that no foreign objects or liquids are present inside the internal space (e.g. rainwater, etc.).

If present, rainwater must be pumped off from the tank before any handling with the flocculant preparation station starts.

While handling the flocculant preparation station, the following rules must be observed:

- select a handling method/equipment suitable for the station weight, size, and shape,
- while setting or hanging the station, follow the rules resulting out of the below picture.

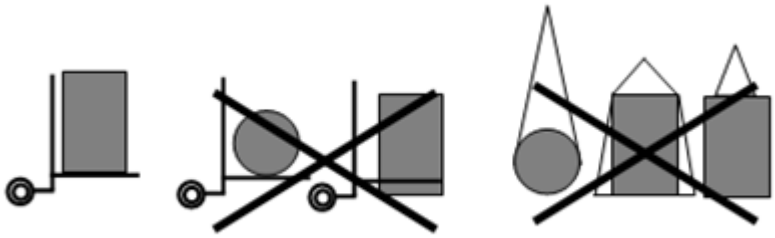

As regards its weight, handling the flocculant preparation station may be performed by the following methods:

- Under the weight of 100 kg, handling is to be performed manually or with the use of a forklift.
- Above the weight of 100 kg, handling is to be performed with the use of a forklift. The handling method can be selected according to the forklift parameters, i.e. its load-bearing capacity, dimensions, and size of the station and, in the first place, with regard to the handling safety.

- If a crane is used, its load-bearing capacity must be at least equal to the station type and weight. Weight of specific station type is described in ANNEX 1 - CATALOGUE list AS-Prochem D

While handling the station, follow the generally applicable rules concerning the occupational health & safety issues.

4.2 Transport and storage

The flocculant preparation stations are supplied as complete systems. Their installation (setting) is carried out at a place specified by the customer and - due to its simplicity - the putting the station into service as well as training of the operators is conducted by the customer as well.

For the transport, use suitable means adequate to the weight and dimensions of the flocculant preparation station.

Place the flocculant preparation station always on the bottom and fix it against any accidental movements.

Do not transport any foreign things inside the tanks of the flocculant preparation station.

Before the station is installed on the intended site, it is necessary to prepare for its temporary placement a suitably flat and paved/hard surface and provide for other conditions protecting the completeness and integrity of the supply against mechanical damage and/or interventions from unauthorised persons. The station must be also suitably secured against potential injuries of unauthorised persons.

During the storage exceeding a period of two months, the plastic tanks of the flocculant preparation station must be shaded against sun radiation.

5. INSTALLATION

5.1 General instructions for installation (setting)

The equipment installation may be carried out only by persons-holders of adequate professional qualifications for construction works. In addition, the installation must be carried out in accordance with the below given instructions and the construction design must be prepared by a person professionally competent for such work.

	The builder's works in connection must be prepared according to an approved design drawn up by a professionally competent person; this person will ask the supplier for supporting documents and data.
	Pay a special attention to cleanliness of the foundation slab; it must be free of any stones, debris, or other foreign things that could damage the bottom of the flocculant preparation station. ***If, nevertheless, any damage to the tank of the flocculant preparation station is found before or during the installation, stop the installation work immediately and contact ASIO TECH, spol. s r.o. or its authorised representative!***

5.2 General procedures of the installation of the flocculant preparation station

A suitable space must be prepared for the setting of the flocculant preparation station; its ground-plan dimensions and load-bearing capacity of the floor must be adequate to the weight and dimensions of the relevant type of the flocculant preparation station, including the maximum weight of the liquid charge. The tank of the flocculant preparation station must be placed on a flat surface with the planarity up to ± 5 mm (this means both irregularities as well as out-of-flatness values). The thickness of the concrete foundation slab must be adequate to the structural load-bearing capacity (the same applies to the subgrade) plus the weight of the completely filled station.

A safe access to the room must be provided with regard to the station installation (i.e. adequate to its weight and dimensions). This also applies to installations opening that may be built up after the installation.

5.3 Fixing and installation procedures

Before the tank of the flocculant preparation station is laid on the foundation slab or floor, fill the tank with water up to ca. 0.4 m level. This enables to fix the station to the supporting surface. Waterproof connections (according to Section 5.4) should be made consequently. Afterwards, make electrical connections according to Section 5.5.

	Except for liquid media or stirring effects, it is strictly forbidden to load structurally or in any other way the tank of the flocculant preparation station.

5.4 Table of connections

		AS-Prochem D				
Purpose	**Connection type**	**0.5**	**0.75**	**1**	**1.25**	**1.5**
Pressure water	Welded polypropylene	DN20				
Pump suction	Welded polypropylene	DN15				
Pump by-pass	Welded polypropylene	DN15				
Opening for the float	Welded polypropylene	DN40				
Drain valve	Bonded PVC	d50				

5.5 Electrical installations

5.5.1 General

Electrical parts of the intrinsic equipment of the flocculant preparation station consist of the electric motor and level gauge. The following steps must be made within the equipment installation works:

- fitting-out of the electrical panel (if it is not a part of the supply of ASIO TECH, spol. s r.o.) according to the specification set out in Article 5.5.4; the panel is equipped with a control unit for automated operations,
- installation of the electrical panel nearby the flocculant preparation station, and
- cabling among the electrical panel and electrical elements (drives).

Electrical installations should be connected in the scope specified by the relevant design documents prepared by a professionally competent person. The design documents must also contain the "Manual for operating the control unit of the flocculant preparation station".

All electrical installation must be designed and prepared in compliance with ČSN EN 60204-1 (Safety of machinery - Electrical equipment of machines).

5.5.2 Electrical parts

All electrical parts and components must meet the requirements of the relevant European standards and bear the "CE" mark.

5.5.3 Conductor types and cross-sections

The requirements for the conductors are summarised in the table below.

Use	**Type**	**Cross-section** (mm^2)	**Other**
Stirrer connections	CMFM 4×1	1	

Level gauge connections	JYTY-O 4×1	1	

5.5.4 Electrical panel

The electrical panel must provide at least for the following functions:

- switching on/off by the use of the power switch,
- switching on/off of automatic running of the stirrer,
- power supply of the level gauge and evaluation of its signals, and
- setting of automatic running of the stirrer in the run/pause mode (e.g. 5/120 minutes).

The electrical panel must be situated at a suitable place enabling safe control of the station.

5.5.5 Emergency stop

An emergency stop element must be a part of the electrical installation. This element must be prepared in accordance with the current technical standards.

6. HANDING OVER TO THE CUSTOMER

The handover procedure is carried out directly with the customer or the first forwarder by signing of the bill of delivery. At the same time, the supplier will hand over to the customer the original technical documentation consisting of:

- leakproofness test certificate for the flocculant preparation station, and
- design and installation supporting documents plus the manual.

7. COMMISSIONG OF THE EQUIPMENT

7.1 General

The equipment commissioning (putting into service) will be possible after the installation works described in Section 5 are completed. The following items must be handed over to the operating entity (company) before the putting into service at least:

- this Operation Manual,
- the Manual for operating the equipment control unit and electric drives connected thereto (the manual may be a part of the Electrical Documentation or the Operating Rules for the WWTP),
- Electrical Documentation.

Check for the documentation completeness and, if it is not complete, do not operate the equipment and contact the equipment supplier.

7.2 Checks before starting the equipment up

Before you start the equipment (put it into service) make sure that:

- the equipment is correctly connected to all pipe inlets and outlets,
- the equipment is correctly connected to the electric panelboard,
- no spillages are present at the connection points,
- pressure water supply is brought to the equipment,
- no foreign things are present inside the equipment,
- the discharge valve is closed.

Before the start-up, pay a special attention to the equipment conditions – check for foreign things inside the equipment! It is strictly forbidden to place your hands or other things into/nearby the running equipment, particularly to places with moving parts!

7.3 First start-up and checks of drives

Before you start the equipment, set all the drives to the position OFF. Then switch the main switch ON and check separate units for their correct functions. Switch the check units (drives) to the position MANUAL (ON) and after the check is completed, switch them back to the OFF position (see below).

Correct settings of the equipment operations, including the dives, must be carried out by a professionally competent technician familiar with the equipment. Optimal settings (tuning) will be made during the trial operations.

If any changes in the settings of the drives or the automated operations of the dosing station are necessary, proceed according to the Manual for operating the equipment control unit and electric drives.

7.3.1 Checking of stirrer wiring

Before switching the stirrer ON, fill the station tank with water so that the stirrer paddles are at least 300 mm under the water level. "Dry" running of the stirrers may damage them or the whole station.

- Switch the stirrer drive ON, check for its correct running and direction of rotation

  (The correct direction of rotation = the stirrer turns clockwise, if viewed from the above)

If incorrect direction of rotation is found, it will be necessary to repair the wiring in the electric panelboard. Repairs in the electric panelboard may be carried out only by the panelboard supplier or its authorised person.

7.4 Automated operations

Once the correct wiring of the equipment as well as correct functions of all drives (including the drives connected to or depending on the equipment) is verified, the automated operations of the equipment may start.

Automated mode ensures mixing of prepared flocculant solution. Automated mode is started when the stirrer is turn to "AUT" mode on switchboard. The stirrer operation (time of run/time of rest) is described below:

No.	**Time of run**	**Time of rest**
Stirrer	5 minutes	120 minutes

8. OPERATION

8.1 General

Operations, control, and changes in the settings must be carried out in accordance with the Operation Manual.

8.2 Operational checks

Under operation, it is necessary to check every day:

- for potential failures of the equipment or its parts,
- for potential leakages, and
- for unusual noise and/or vibrations.

If case of any defect found, provide for immediate remedy (in the scope approved by this Manual) or seek professional assistance.

8.3 Emergency stop

The emergency stop button (its stop all the drives) is intended for cases of danger to persons or property.

The emergency stop button is a part of the control unit supply!

8.4 Shutdowns

8.4.1 Short-time shutdowns

In cases of shutdowns shorter than one week, terminate the process as follows:

- stop the equipment (by switching the drives to the OFF position),
- drain the flocculant solution from the station
- flush the station with a stream of clean water so that no flocculant solution remains in the tank
- clean the wetting device from the flocculant.

Never use manual washing for cleaning of electrical parts!

Do not place the washing hose near the equipment moving parts under operation!

After the washing procedure, do not leave the hose near the equipment moving parts'

8.4.2 Shutdowns longer than one week

If the equipment is to be shutdown for a longer period than one week, it will be necessary to clean the stirrers as well. Stop the equipment (by switching the drives to the OFF position), before you start cleaning procedure.

9. MAINTENANCE

9.1 General

Thoroughly and consistently performed maintenance procedures are the fundamental pre-requisites for long-term, reliable, and safe operations of the equipment. Consistent adherence to the provisions of this Manual will help you:

- to keep the equipment operational and ready at any time,
- to prevent various defects and avoid unnecessary repair costs, and
- to achieve the equipment optimal service life.

Make sure that all maintenance procedures are carried out thoroughly and in stipulated intervals.

9.2 Scope of the maintenance

The scope of the maintenance is described in the table below.

interval						Activity to be performed	Procedure
Daily	Weekly	Monthly	Quarterly	Annually	Other		
x						Overal check	see Article 9.3
	x					Checking of stirrer correct function	see Article 9.3
	x					Checking of correct functions and cleaning of the level gauges	see Article 9.3
	x					Checking of correct function of the wetting device	see Article 9.3
	x					Checking of correct functions of the hand-operated valves	see Article 9.3
			x		As needed	Complete cleaning of the equipment	see Article 9.3
				x		Checking of electrical parts	see Article 9.3

9.3 Maintenance procedures

General

Maintenance procedures should be carried out in accordance with the table shown in Section 9.2 herein. If the maintenance procedures are not described in detail in this Manual, use the procedures generally used for equipment and machinery maintenance.

While working, pay a special attention not to get into any contact with moving parts!

Never place your hands, foreign things or otherwise intervene in the tank if the stirrer runs!

Follow all the safety-at-work principles according to this Manual!

Overall check

Run an overall visual check of the equipment and identify changes, if any, such as:

- changed noise level,
- changes in stirrer of revolutions,
- changes in the pressure water quantities,
- leaks around the equipment, and
- unusual contamination of the equipment and/or its neighbourhood.

In addition, also check for:

- the bolt connection tightness,
- leaks of liquids from the equipment,
- unusual noises or vibrations,
- unusual noise of drives and/or their excessive heating or liquid leaks.

Checking of stirrer correct function

In regular intervals, check for correct function of stirrer in the manual mode.

Checking of correct functions and cleaning of the level gauges

In regular intervals, check for correct functions of the level gauges by comparing with the level detection display. In regular intervals, clean S1 and S2 level gauges with pressure water or a wet rag.

Checking of correct function of the wetting device

In regular intervals, check the wetting device for correct function. The device should be clean with no deposits of powdered flocculant inside. In regular intervals, clean the wetting device to ensure smooth flow of the flocculant.

Checking of correct functions of the hand-operated valves

In regular intervals, turn the hand-operated valves to their end position on both sides in order to prevent their “setting”.

Complete cleaning of the equipment

Due to the possibility of formation of clusters of unmixed flocculant particles that can sediment on the bottom of the equipment and may clog the dosing pump, it is necessary to clean regularly the bottom content of the tank using pressure water and opened discharge valve.

Provide for complete draining of the chamber and be sure that no flocculant residua remain there. Cleaning must be carried at the equipment shutdown.

Checking the electrical parts

In regular intervals, check the electrical installations. This check may be carried out only by a professionally competent person!

10. SERVICE

The station tanks must be visually inspected during the regular service intervals in the following scope: leakproofness test for the tank, visual inspections of tank walls and welds. If any defects are found, it will be necessary to repair them by a professionally competent and duly authorised person or put the station out of service. The above-mention inspections are carried out by the equipment operators.

It is strictly forbidden to fill the flocculant preparation station above the maximum level (V_{max}).

The maximum level of the flocculant solution in the tank of the flocculant preparation station is stipulated for 300 mm vertically from the inner face of the tank ceiling.

In order for an easier access, the flocculant preparation station is equipped with an operator's upstand.

In order to identify easily the liquid quantity in the tank of the flocculant preparation station, the tank is fitted with a measuring scale on its vertical transparent line. One graduation line corresponds to 10 % of active tank volume.

V_{max} = 100 % of the tank volume

Δ = 10 % of active tank volume

V_{min} = 40 % of the tank volume

1 graduation line = 10 % of active tank volume

Media volume in liters for specific active volume:

	40 %	50 %	60 %	70 %	80 %	90 %	100 %
AS-PROCHEM D 0.5	181	227	272	318	363	408	454
AS-PROCHEM D 0.75	277	346	415	485	554	623	692
AS-PROCHEM D 1.0	362	452	543	633	723	814	904
AS-PROCHEM D 1.25	458	572	687	801	916	1030	1145
AS-PROCHEM D 1.5	565	707	848	989	1130	1272	1413

Except for the hydrostatic pressure of the solution and dynamic effects of the stirrer, no other pressures/effects are permissible in the tank of the flocculant preparation station.

The above-specified requirement must be respected also by the filling system or draining procedures or process connections.

It is strictly forbidden to step/walk on the ceiling or plastic covers of the flocculant preparation stations.

While handling the tank, increased care must be taken. If the tank is handled improperly, the tank stability may be endangered or there will be a risk of injury for handling persons falling or skin scratching.

ANNEX 1 - CATALOGUE LIST AS-PROCHEM D

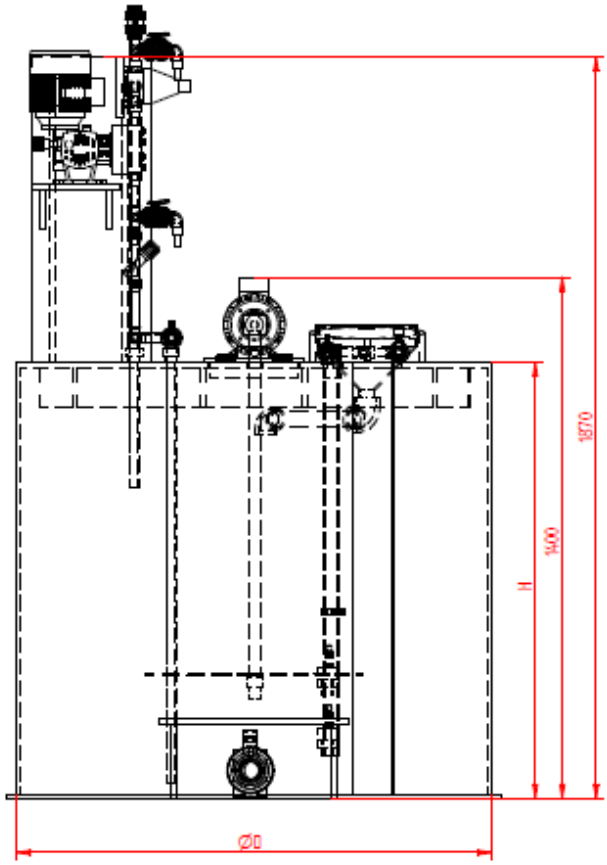

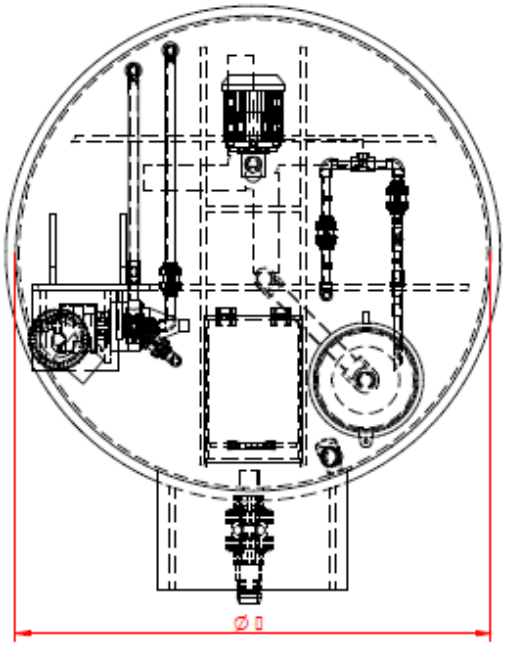

AS-PROCHEM D

No.	Type	Outer dimensions ØD/H [mm]	Active volume V_{max} [L]	Transport weight (w/o pump) [kg]	Operational weight (w/o pump) [kg]
033.050.xx/yy	AS-PROCHEM D 0.5	Ø850/1100	454	80	720
033.075.xx/yy	AS-PROCHEM D 0.75	Ø1050/1100	692	90	1220
033.100.xx/yy	AS-PROCHEM D 1.0	Ø1200/1100	904	110	1420
033.125.xx/yy	AS-PROCHEM D 1.25	Ø1350/1100	1145	125	1720
033.150.xx/yy	AS-PROCHEM D 1.5	Ø1500/1100	1413	155	2120

xx = 00 ….. basin without base for a dosing pump
xx = 01….. basin including base for OBL dosing pump
xx = 02….. basin including base for Grundfos dosing pump
yy = DK …. Basin including a hopper for automatic powder dosing

Valid from: 20th September 2019